REVISIONS				
Rev.	ZONE	Description	Date	Approved

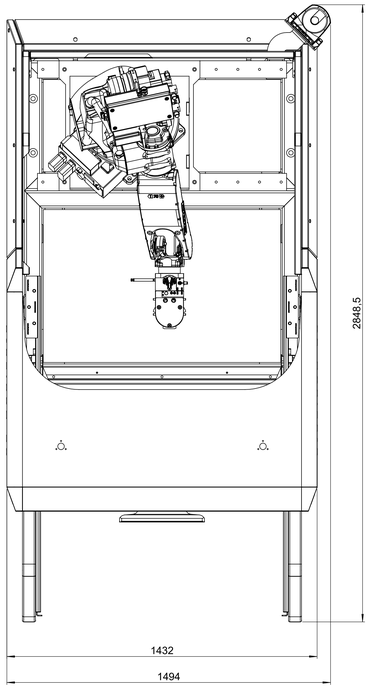

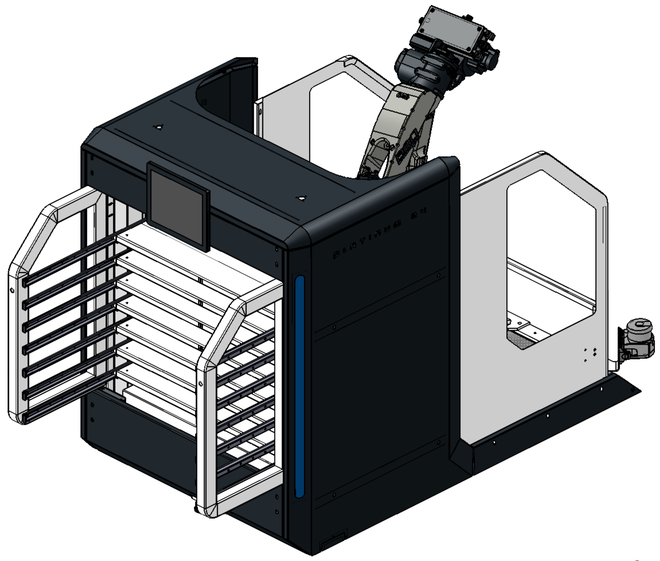

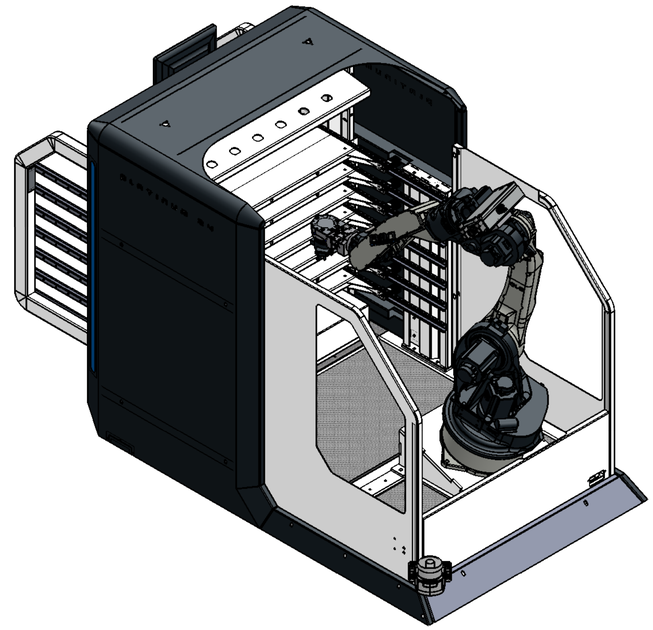

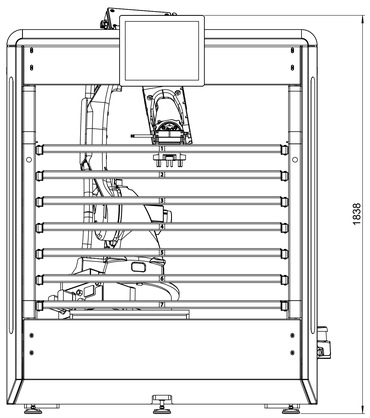

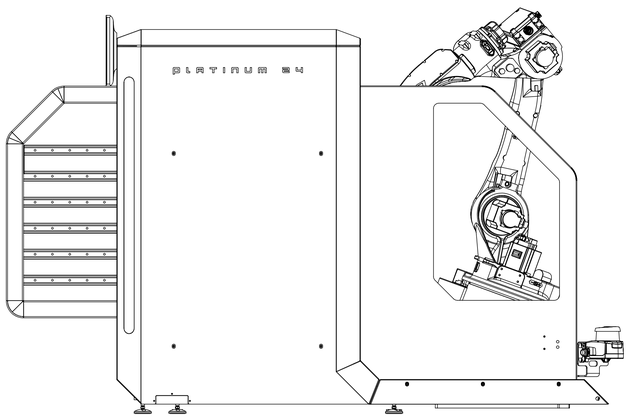

Description: Platinum 24 Frontloader	Drawn : P.J.	Project :	
	Date : 17-8-2018	American projection	
Material: See mono's	Status :	Weight : 21770.51 kg	
Treatment:	Scale : 1:10	Sheet No. : 1/1	
BMO Automation Magnesiumstraat 18 6031 RV Nederweert The Netherlands T : +31 (0) 495 622437 @ info@bmoautomation.nl www.bmoautomation.nl	Dimensional tolerances according : ISO 2768-mK Roughness according : EN-ISO 1302 Geometrical tolerances according : EN-ISO 1101		A0
	Drawing no. Pt24F		Revision 0